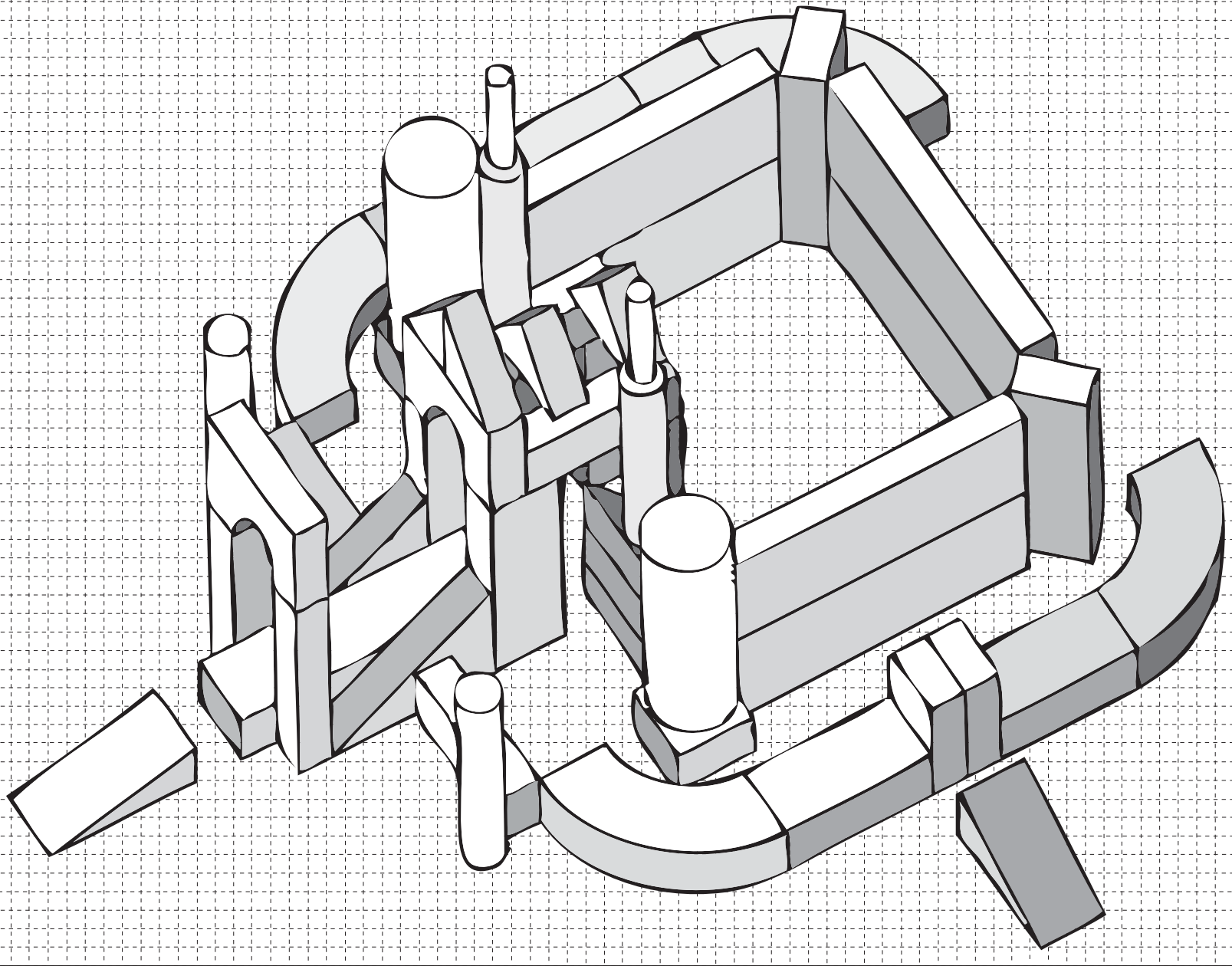

Ready 2 Read! PlaySpace

Montana State Library

DENNIS & PHYLLIS WASHINGTON FOUNDATION

TITLE: castle

MATERIALS NEEDED:

SCALE: